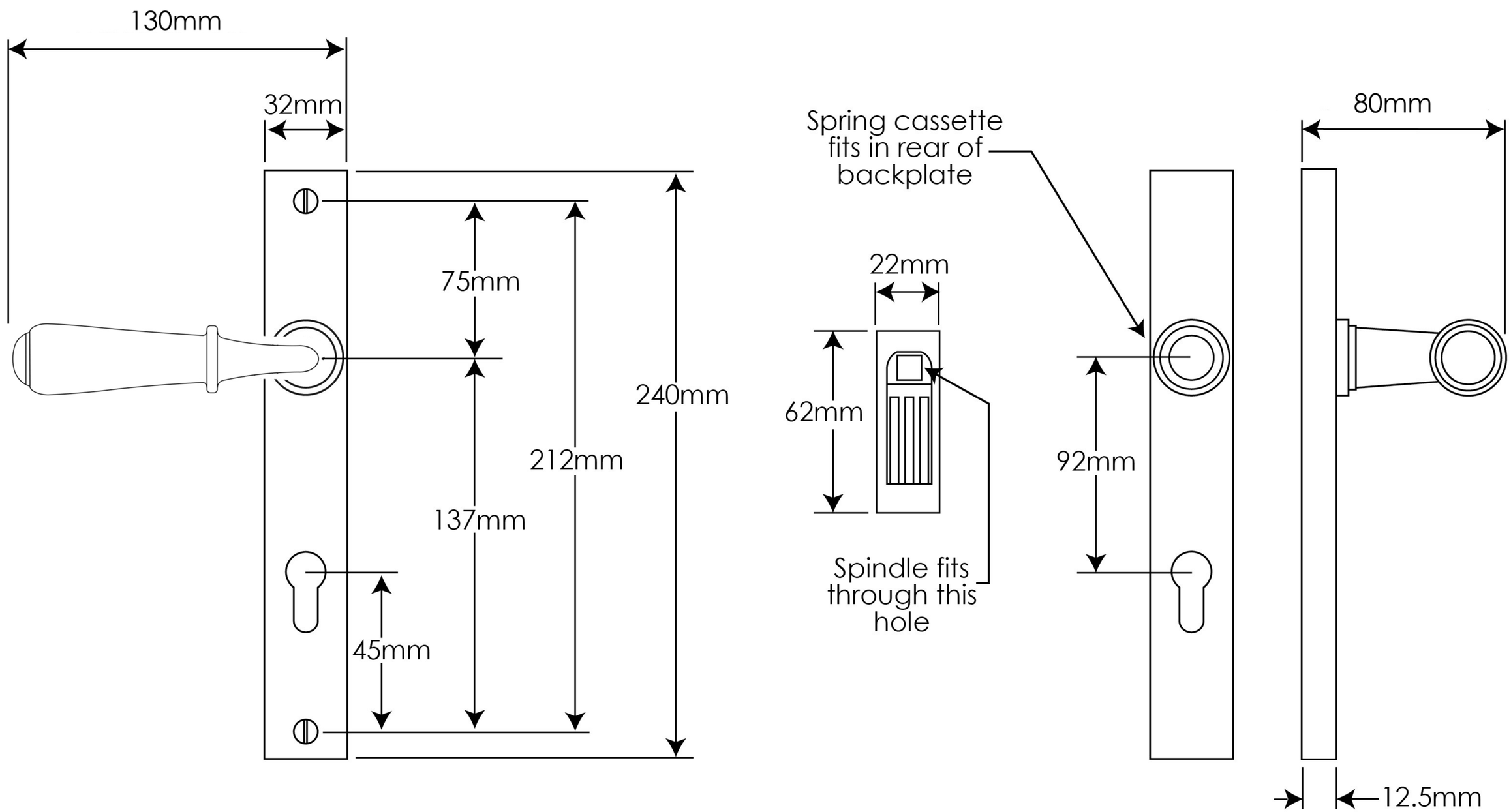
130mm
32mm
75mm
240mm
212mm
137mm
45mm
Spring cassette fits in rear of backplate
22mm
62mm
Spindle fits through this hole
92mm
80mm
12.5mm